Address : 7/F, Block A YuShan Industrial Park,Songbai Road,ShiYan Town,Bao'An | CN-518108 Shenzhen
Tel: 0755-29405686 www.newstar-ledstrip.com info@newstarleds.com

HD108

SPECIFICATION

The upgrade LED of RGB HD107S

16-bit (65536 Level) gray-scale

PWM refresh rate: 27kHz

Oscillator Frequency: 40MHz

Document No.: SPC/ HD108

Model No.: HD108

Description: 5.5x5.0x1.6mm Top SMD Type 0.2Watt Power tegrated light source Intelligent control LED

Rev. No.: 01

正式规格书

NEWSTAR

Address : 7/F, Block A YuShan Industrial Park,Songbai Road,ShiYan Town,Bao'An | CN-518108 Shenzhen
Tel: 0755-29405686 www.newstar-ledstrip.com info@newstarleds.com

1. Product Overview :

HD108 is a two-wire transmission three-channel (RGB) drive control circuit and light-emitting circuit in one of the intelligent external control LED light source. Built-in constant current circuit and RC oscillator; internal integrated current gain control module, CMOS process, low voltage, low power consumption; when REXT is floating, the three-channel constant current driver default output of 18mA, the product is equipped with signal decoding module, Can also be REXT external resistor to adjust the required current, each output channel can output 16 (65536 level) gray adjustable linear current; using two-wire output, DATA data and synchronous CLK signal, so that the series chip The output action synchronization; refresh rate up to 27KHz, showing more delicate and smooth, the default power does not light.

2. Main Application Field:

- **Full color LED string light, LED full color module, LED super hard and soft lights, LED guardrail tube, LED appearance / scene lighting**
- **LED point light, LED pixel screen, LED shaped screen, a variety of electronic products, electrical equipment etc..**

3. Description:

- **Top SMD internal integrated high quality external control line serial cascade constant current IC; 5V application; default on electric lights;**
- **Control circuit and the RGB chip in SMD 5050 components, to form a complete control of pixel, color mixing uniformity and consistency;**
- **The Two-wire synchronous control, built-in bi-directional transmission function.**
- **RGB three-color output control, 64Bit (65536 level) color settings; each set of data are 1bit start code +15 Bit (32) brightness adjustment (red, green, blue three ports each 5bits, corresponding to S4 ~ S0) ; 48bits gray data (red, green, blue 16bits) composition.**
- **Three-way constant current drive, built-in high-precision and high stability of the oscillator, current error <± 5%.**
- **The maximum serial data input frequency 40MHZ, refresh rate of up to 27KHz, cascade up to 1024 points.**
- **REXT external resistance adjusting current (REXT floating, OUTR / G / B to about 18mA; REXT external resistor to adjust the maximum current of 60mA).**

4. Mechanical Dimensions:

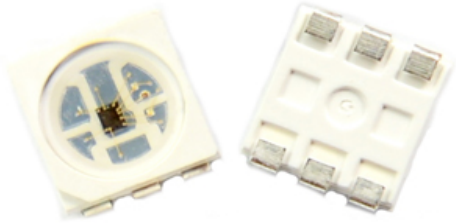

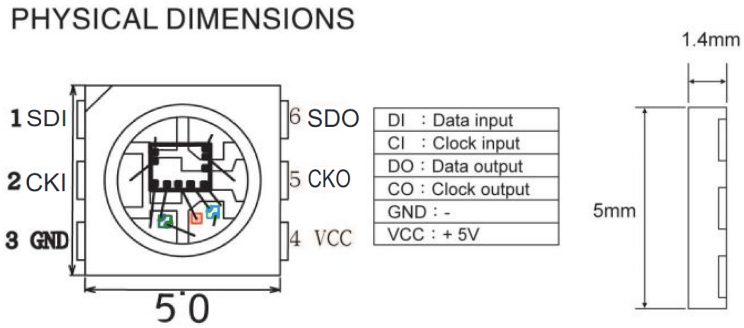

Notes:
1. All dimensions are in millimeters.
2. Tolerance is ±0.1mm unless otherwise noted

Address : 7/F, Block A YuShan Industrial Park,Songbai Road,ShiYan Town,Bao'An | CN-518108 Shenzhen
Tel: 0755-29405686 www.newstar-ledstrip.com info@newstarleds.com

5. PIN configuration

Item	Symbol	Pin Name	Function description
1	SDI	Data Input	control signal Input data
2	CKI	CLK Input	control signal Input Clock data
3	GND	Ground	The signal and power supply and grounding
4	VCC	Power	power supply pin
5	CKO	CLK Output	Clock signal output terminal connected in series, via the internal lock regeneration and strong drive output
6	SDO	Data Input	Series data output and internal strong drive output

6. Recommended dimensions for PCB products

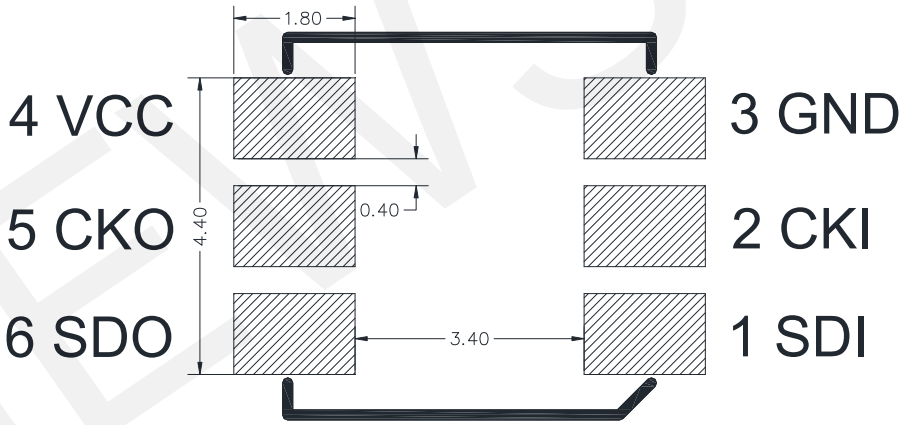

7. General Information

HD108

HD108: The default is RGB chips with IC integration

NEWSTAR

Address : 7/F, Block A YuShan Industrial Park,Songbai Road,ShiYan Town,Bao'An | CN-518108 Shenzhen
Tel: 0755-29405686 www.newstar-ledstrip.com info@newstarleds.com

8. Electrical parameter（Ta=25℃,VSS=0V）：

Parameter	Symbol	Range	Unit
Power supply voltage	VDD	-0.5～+5.5	V
Logic input voltage	V_{IN}	-0.5～VDD+0.5	V
Working temperature	Topt	-40~+85	℃
Storage temperature	Tstg	-50~+150	℃
Power dissipation	PD	550	mW
ESD pressure(HBM)	V_{ESD}	>4K	V
ESD pressure(DM)	V_{ESD}	200	V

9. Electrical/Optical Characteristics:

Color	SK9826		
	Dominate avelength(nm)	Luminance(mcd)	luminous flux(lm)
Red	620-630	400-700	1.0-2.0
Green	515-530	1000-1500	4.0-5.0
Blue	460-475	200-400	1.0-1.5

NEWSTAR

Address : 17F, Block A YuShan Industrial Park,Songbai Road,ShiYan Town,Bao'An | CN-518108 Shenzhen
Tel: 0755-29405686 www.newstar-ledstrip.com info@newstarleds.com

10. The IC electrical parameters (unless otherwise specified, TA=-20 ~ +70 ℃, VDD=4.5 ~ 5.5V, VSS=0V):

Parmeter	Symbol	Min	Typical	Max	Unit	Test conditions
The chip supply voltage	VDD	---	5.1	5.5	V	---
The signal input flip threshold	VIH	3.0	---	---	V	VDD=5.0V
	VIL	---	---	1.6	V	
The biggest LED output current	I_{max}	---	---	20	mA	V_{DS} =2V,REXT Vacant
The frequency of PWM	FPWM	---	27.0	---	KHZ	---
Static power consumption	I_{DD}	---	1.1	---	mA	---
OUTR / G / B port current variation	%VS.V_{DS}	---	0.5	---	%	V_{DS} =1~5V, I_{OUT} =18mA
	%VS.VDD	---	2.5	---	%	VDD =4~6V, I_{OUT} =18mA
	%VS . Temp.	---	5.0	---	%	I_{OUT} =18mA,Temp=-40~+85℃

11. Switching characteristics (VCC = 5V ± 5%, Ta = 25 ˚ C):

Parameter	Symbol	Min	Typical	Max	Unit	Test conditions
The speed of data transmission	fDIN	---	27.15	---	KHZ	50% duty cycle gain adjustment 10001
DCLKO conversion time	T_{r1}	---	6.8	---	ns	DCLKO port load capacitance 30pF
	T_{f1}	---	5.5	---	ns	
DOUT conversion time	T_{r2}	---	60	---	ns	50% duty cycle gain adjustment 10001
	T_{f2}	---	50	---	ns	

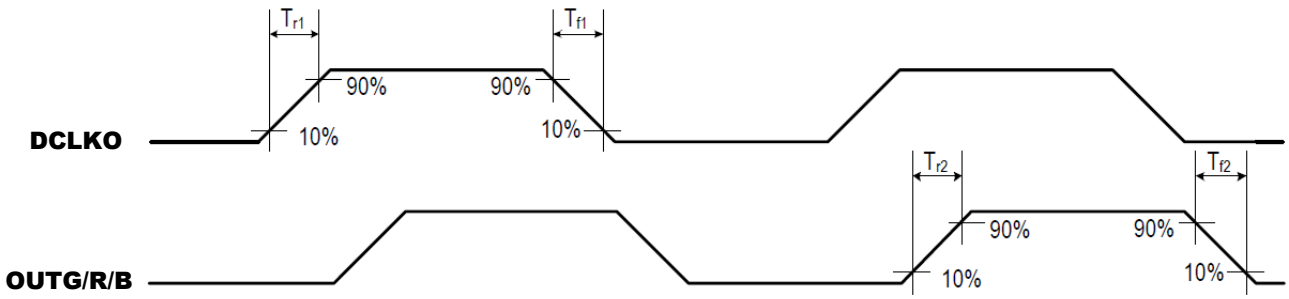

Address : 7/F, Block A YuShan Industrial Park,Songbai Road,ShiYan Town,Bao'An | CN-518108 Shenzhen
Tel: 0755-29405686 www.newstar-ledstrip.com info@newstarleds.com

12. Data communication protocol:

(1) 16bits grayscale data format input :

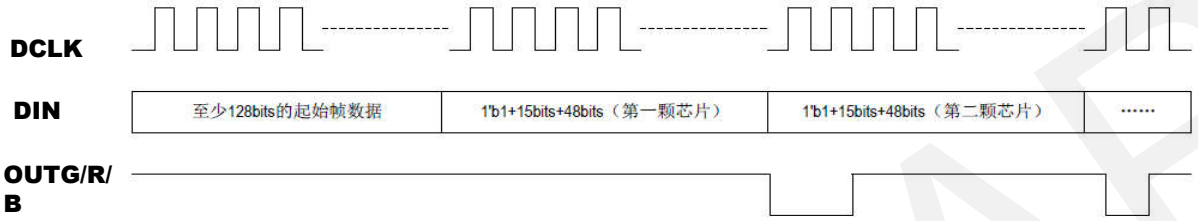

(A) first into at least 128bits "0" as the starting frame, and then moved into the data frame, the starting frame and the data frame are high first move in, DCLK rising edge sampling data:

(B) Each set of gray scale data is composed of 1bit start code + 15bits current gain adjustment value (red and green blue three ports each 5bits) + 48bits gray data (red, green and blue lights 16bits)

(C) the first data frame is the corresponding distance from the end of the nearest LED driver chip;

(D) After the completion of the gray data transmission, additional pulse corresponding to the number of chips need to add additional DCLK (that is, 512 chips in cascade, need to send additional 512 DCLK), DIN remains high, the new data that comes into effect;

(2) Each chip gradation data format :

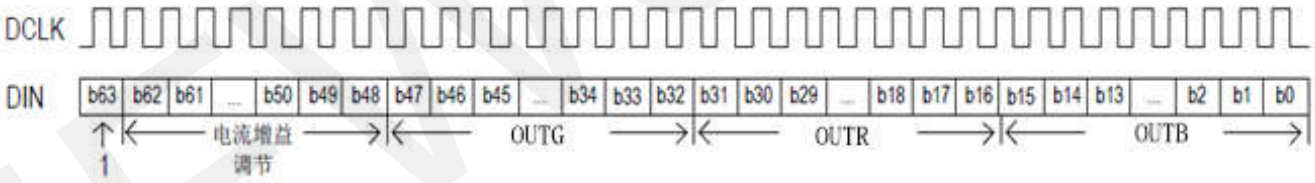

(3) Product output structure: GRB order to light, optimize the product color mixing effect (adjust the IC default RGB sequential chip position);

(4) Current gain adjustment parameters:

Current gain function Data transmission format:

Red and blue lights a total of 15bits current gain adjustment bit, respectively, corresponding to 5bits (S4 ~ S0), the system is the first order to send red light 5bits, and then the green light 5bits, the last blue light 5bits, starting high S4, S0.

Address : 7/F, Block A YuShan Industrial Park,Songbai Road,ShiYan Town,Bao'An | CN-518108 Shenzhen
Tel: 0755-29405686 www.newstar-ledstrip.com info@newstarleds.com

Current gain parameter transmission format		
Green（G)	**Red（R)**	**Blue（B)**
S4 , S3 , S2 , S1 , S0	**S4 , S3 , S2 , S1 , S0**	**S4 , S3 , S2 , S1 , S0**

Specific current setting table ：

Current regulation level	Current gain adjustment bit					Corresponding current value（mA)
	S4	S3	S2	S1	S0	
1	0	0	0	0	0	1.68
2	0	0	0	0	1	2.24
3	0	0	0	1	0	2.80
4	0	0	0	1	1	3.36
5	0	0	1	0	0	3.92
6	0	0	1	0	1	4.48
7	0	0	1	1	0	5.04
8	0	0	1	1	1	5.60
9	0	1	0	0	0	6.16
10	0	1	0	0	1	6.72
11	0	1	0	1	0	7.28
12	0	1	0	1	1	7.84
13	0	1	1	0	0	8.40
14	0	1	1	0	1	8.96
15	0	1	1	1	0	9.52
16	0	1	1	1	1	10.08
17	1	0	0	0	0	10.64
18	1	0	0	0	1	11.20
19	1	0	0	1	0	11.76
20	1	0	0	1	1	12.32
21	1	0	1	0	0	12.88
22	1	0	1	0	1	13.44
23	1	0	1	1	0	14.00
24	1	0	1	1	1	14.56
25	1	1	0	0	0	15.12
26	1	1	0	0	1	15.68
27	1	1	0	1	0	16.24
28	1	1	0	1	1	16.80
29	1	1	1	0	0	17.36
30	1	1	1	0	1	17.92
31	1	1	1	1	0	18.48
32	1	1	1	1	1	19.04

NEWSTAR

Address : 7/F, Block A YuShan Industrial Park,Songbai Road,ShiYan Town,Bao'An | CN-518108 Shenzhen
Tel: 0755-29405686 www.newstar-ledstrip.com info@newstarleds.com

13. The typical application circuit:

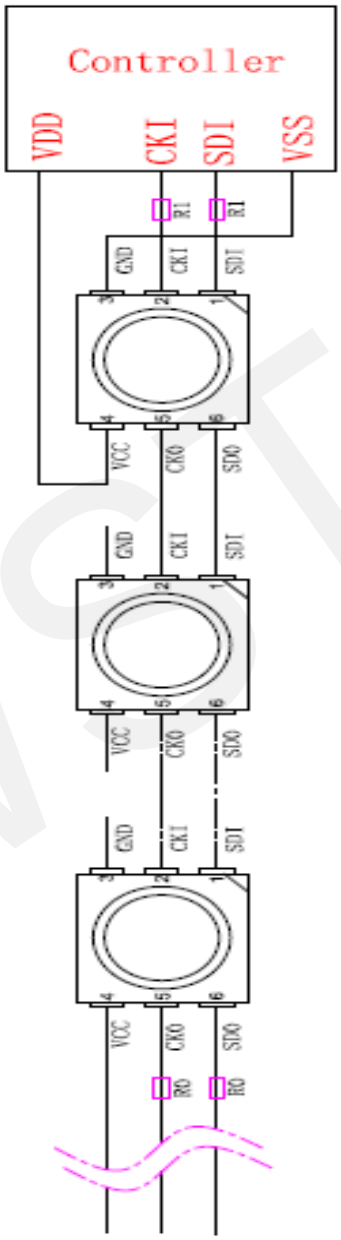

In the practical application circuit, the signal input and output pins of the IC signal input and output pins should be connected to the signal input and output terminals. In addition, in order to make the IC chip is more stable, even the capacitance between beads is essential back;

Application: used for soft lamp strip or hard light, lamp beads transmission distance is short, suggested in signal in time the clock line input and output end of each connected in series protection resistors, R1=R0 of about 500 ohms.

Application: for module or general special-shaped products, lamp beads transmission distance is long, because of different wire and transmission distance, in the signal in time clock at both ends of the line on grounding protection resistance will be slightly different; to the actual use of fixed;

NEWSTAR

Address : 7/F, Block A YuShan Industrial Park,Songbai Road,ShiYan Town,Bao'An | CN-518108 Shenzhen
Tel: 0755-29405686 www.newstar-ledstrip.com info@newstarleds.com

14. Standard LED Performance Graph:

Thermal Pad Temperature vs. Relative Light Output

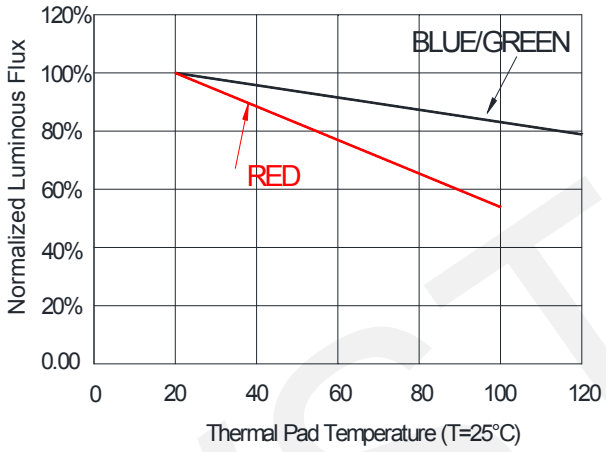

Wavelength Characteristics

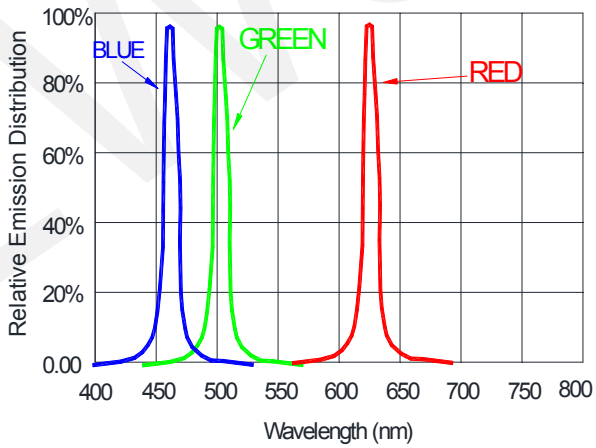

Typical Radiation Pattern 120°

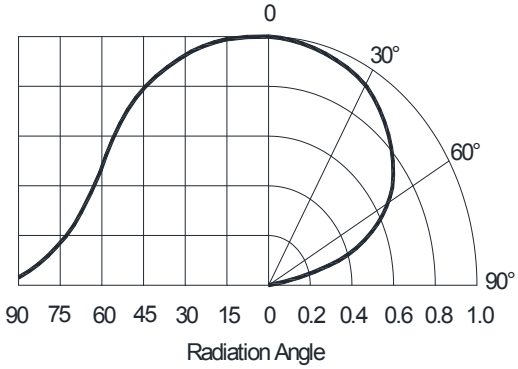

Address : 7/F, Block A YuShan Industrial Park,Songbai Road,ShiYan Town,Bao'An | CN-518108 Shenzhen
Tel: 0755-29405686 www.newstar-ledstrip.com info@newstarleds.com

15. Packaging Standard:

HD108

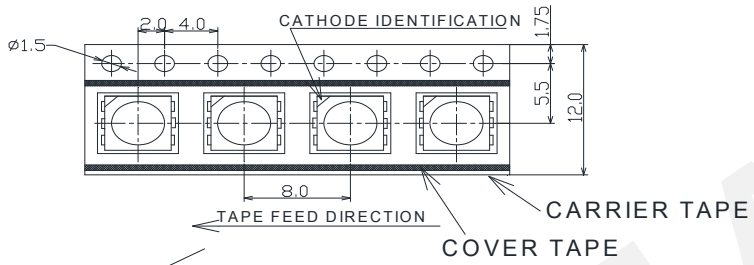

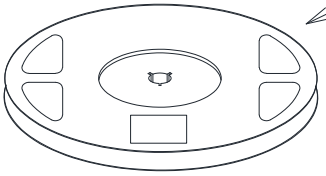

REEL(178x12mm)
(INNER 1000pcs LED MAX)

ESD POLYETHYLENE BAG

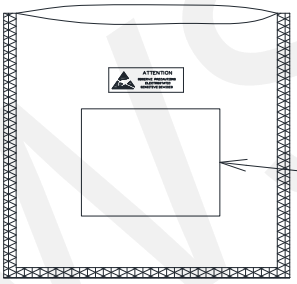

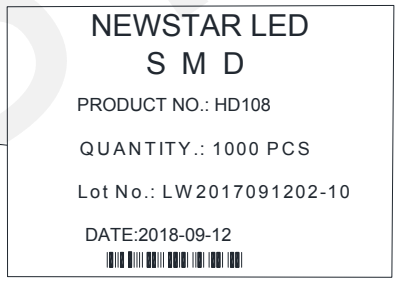

LABEL SKETCHING

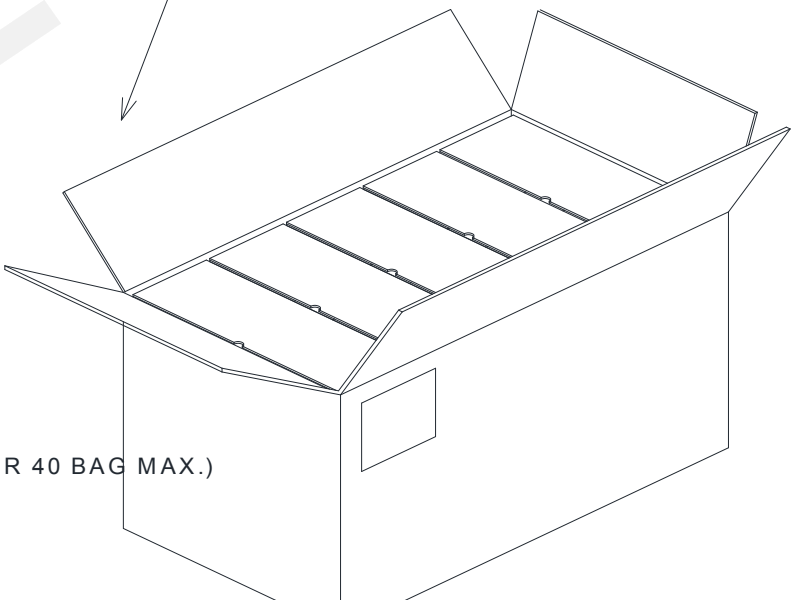

CARDBOARD (INNER 40 BAG MAX.)

The reel pack is applied in SMD LED. The LEDs are packed in cardboard boxes after packaging in normal or anti-electrostatic bags. cardboard boxes will be used to protect the LEDs from mechanical shocks during transportation. The boxes are not water resistant and therefore must be kept away from water and moisture.

Address : 7/F, Block A YuShan Industrial Park,Songbai Road,ShiYan Town,Bao'An | CN-518108 Shenzhen
Tel: 0755-29405686 www.newstar-ledstrip.com info@newstarleds.com

16. Reliability Test :

NO.	Test item	Test Conditions	Reference	Criterion
1	Thermal Shock	100 ± 5° C ~ -40° C ± 5° C 30min~30min 300 cycles	MIL-STD-202G	0/22
2	High Temperature Storage	Ta= +100°C 1000hrs	JEITA ED-4701 200 201	0/22
3	Low Temperature Storage	Ta= -40°C 1000hrs	JEITA ED-4701 200 202	0/22
4	High Temperature High Humidity Storage	Ta=60°C RH=90% 1000hrs	JEITA ED-4701 100 103	0/22
5	Temperature Cycle	-55°C~25°C~100°C~25°C 30min~5min~30min~5min 100 cycles	JEITA ED-4701 100 105	0/22
6	Resistance to Soldering Heat	Tsld = 260° C, 10sec. 3 times	JEITA ED-4701 300 301	0/22
7	Room temp Life Test	25° C, IF: Typical current , 1000hrs	JESD22-A 108D	0/22

Criteria for Judging the Damage:

Item	Symbol	Test Condition	Limit	
			Min	Max
Luminous Intensity	IV	DC=5V, Typical current	Init. Value*0.7	---
Resistance to Soldering Heat	---	DC=5V, Typical current	No dead lights or obvious damage	

NEWSTAR

Address : 7/F, Block A YuShan Industrial Park,Songbai Road,ShiYan Town,Bao'An | CN-518108 Shenzhen
Tel: 0755-29405686 www.newstar-ledstrip.com info@newstarleds.com

APPENDIX 1.TOP SMD LED Application Notes

1. Features

The Purposes of making Newstar's customers and users to have a clear understanding on the ways how to use the LED.

2. Description

Generally. The LED can be used the same way as other general purposed semiconductors. When using Newstar's TOP SMD LED, the following precautions must be taken to protect the LED.

3. Cautions

3.1. Dust & Cleaning

This emitter has a silicone surface, There are many benefits to the silicone surface in terms of optical properties and improved reliability. However, silicone is a softer material and prone to attract dust. While a minimal amount of dust and debris on the LED will not cause significant reduction in illumination, steps should be taken to keep the emitter free of dust.

These include keeping the LEDs in the manufacturer's package prior to assembly and storing assemblies in an enclosed area after installing the emitters.

Surface condition of this device may change when organic solvents such as trichloroethylene or acetone were applied.

Avoid using organic solvent, it is recommended that isopropyl be used as a solvent for cleaning the LEDs. When using other solvents, it should be confirmed beforehand whether the solvents will dissolve the package and the resin of not.

Do not clean the LEDs by the ultrasonic. When it is absolutely necessary, the influence as ultrasonic cleaning on the LEDs depends on factors such as ultrasonic power. Baking time and assembled condition. Before cleaning, a pre-test should be done to confirm whether any damage to the LEDs will occur.

3.2. Shipment and storage

TOP SMD LED is a humidity sensor, the LED packaging in the aluminum bag is to avoid the LED in the transport and storage of moisture absorption, in the bag with a desiccant to absorb the moisture inside the bag. If the LED absorbs water vapor, then in the LED over reflow, in the high temperature state, into which the rapid expansion of gas vaporization and produce a greater internal stress, so that the material crack, layered or damaged bonding wire , Resulting in product failure.

TOP SMD LED with a moisture-proof anti-static aluminum foil bag packaging, handling should avoid the process of squeezing, piercing the case of bags, and do the necessary anti-static protective measures; promise products on the line before the leak or broken, Please stop the use of direct use of the product; , Resulting in product failure;

Such as before the material has been found to prevent moisture-proof aluminum foil bags have been opened, damaged, perforated can be returned to the original re-dehumidification, must not be on-line use;

The humidity level of this product is LEVEL5a.

NEWSTAR

Address : 7/F, Block A YuShan Industrial Park,Songbai Road,ShiYan Town,Bao'An | CN-518108 Shenzhen
Tel: 0755-29405686 www.newstar-ledstrip.com info@newstarleds.com

Chart 1:Definition of material' s MSL prescribed by IPC/JEDECJ-STD-020E

Moisture proof	Workshop lifespan after open the packaging	
	Time	condition
LEVEL1	unlimited	≦30℃/85 % RH
LEVEL2	1 year	≦30℃/60 % RH
LEVEL2a	4 Weeks	≦30℃/60 % RH
LEVEL3	168 Hours	≦30℃/60 % RH
LEVEL4	72 Hours	≦30℃/60 % RH
LEVEL5	48 Hours	≦30℃/60 % RH
LEVEL5a	24 Hours	≦30℃/60 % RH
LEVEL6	Take off and use immediately	≦30℃/60 % RH

3.3. Storage before unsealing

In order to avoid the moisture barrier caused by the reliability of the failure problem, need to do LED products SMT pre-storage and moisture-proof measures;

If the moisture-proof bag is not open, the TOP SMD element will be stored for less than 2 months at <30 ˚ C / 60% RH; (Note: The label date is the same and the packing is not leaked. Discoloration under the premise of use; for different moisture-proof grade materials or packaging to save the time there is a certain difference, the specific preservation time to the specification book or packaging tips prevail); recommended in the unassembled do not open the moisture before the bag;

3.4. Control after the packing bag is opened

After opening the moisture-proof bag, please read the moisture-proof bag inside the humidity indicator card in the moisture-proof beads into pink to confirm moisture in the moisture bag is too much, according to the color of the ball to determine whether the bag material on-line operation; And the material after opening the package should be strictly controlled in the table 1 as specified by the maximum temperature and humidity and operating time allowed, as long as the material exposed in the environment described in Table 1, the need to accumulate its use in the workshop time. Open the bag and paste the material on the PCB board, should be completed within 0.5H welding work, do not recommend the material attached to the PCB, a long time stay in the workshop does not carry out SMT work; Caused by adverse water within the lead;

3.5. Definition of humidity card

Open the package after the TOP SMD LED bag inside the humidity card color instructions are as follows:

A. If the moisture card 10% of the moisture-proof beads into pink, other files for the blue, this situation, LED can be used directly;

B. If the humidity card moisture-proof beads 10%, 20% at all become pink, in fact, the file is blue, this situation, the need for low-temperature components dehumidification;

C. If the humidity card moisture-proof beads 10%, 20%, 30% more than three are turned pink, in this case, the customer needs to return the material to our company for high humidity dehumidification, re-packaging before use;

Address : 7/F, Block A YuShan Industrial Park,Songbai Road,ShiYan Town,Bao'An | CN-518108 Shenzhen
Tel: 0755-29405686 www.newstar-ledstrip.com info@newstarleds.com

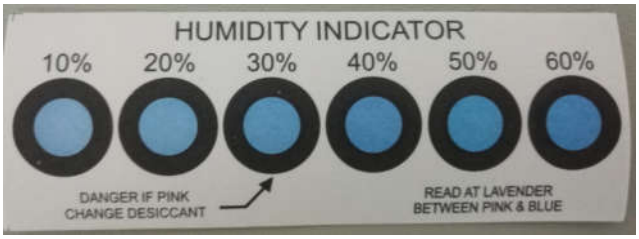

Humidity indicator DO not change color

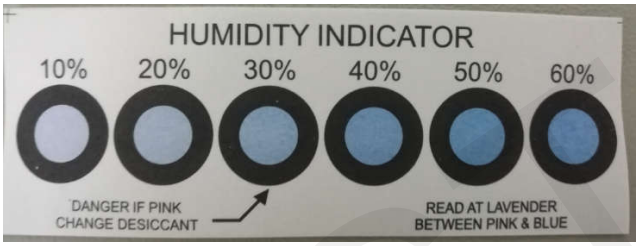

Humidity indicator tums pink in 10% 20%

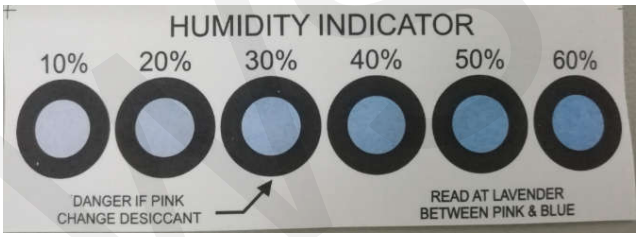

Humidity indicator tums pink in 10% 20% 30%

3.6. Unwanted material moisture-proof storage and moisture-proof control of finished material

If a roll of SMDs is not used at once and the plant temperature and humidity are within the defined conditions (<30 ˚ C / 60% RH), the exposure time of the element in the air does not exceed 2H, the remaining material should be carried out together with the desiccant Vacuum sealed, otherwise, the material must be low-wet baking dehumidification; dehumidified material can be re-packaged to re-start the calculation time;

Perform moisture control on SMDs components that have been assembled

A. After the components have been assembled to the PCB board no longer need to go through the high temperature process or reflow process, it will not be special treatment;

B. Do not need to do the necessary dehumidification work before making the appropriate protection process, bake in 70 ℃ ± 5 ℃ oven baking for less than 12 hours, To remove the product in the detection and aging process exposed to moisture in the air to avoid the product in the protective treatment, the package in the material surface of the moisture will slowly invade the product, will cause product failure;

C. For products that require secondary SMT process or high temperature, they should be subjected to the necessary moisture treatment before secondary welding, after exposure to (<30 ˚ C / 60% RH) , The maximum length of not more than 2H, Connaught second high temperature process separated by a long time, then a welding material must be necessary dehumidification work (70 ℃ ± 5 ℃ oven baking no less than 12 hours), and then pumping Vacuum storage; or the first product stored in the oven or with a desiccant container, the second high-temperature process before doing dehumidification work (70 ℃ ± 5 ℃ in the oven baking no less than 12 hours) , To ensure that products in the high temperature before the process is not damp;

Low-temperature baking conditions: 70 ˚ C ± 5 ˚ C baking not less than 12 hours high temperature baking conditions: 130 ˚ C ± 5 ˚ C baking not less than 6 hours (lamp beads must be split into particles)

Address : 7/F, Block A YuShan Industrial Park,Songbai Road,ShiYan Town,Bao'An | CN-518108 Shenzhen
Tel: 0755-29405686 www.newstar-ledstrip.com info@newstarleds.com

3.7. Reflow Soldering Characteristics

In testing, Newstar has found S50 LEDs to be compatible with JEDEC J-STD-020E,using the parameters listed below. As a general guideline Newstar recommends that users follow the recommended soldering profile provided by the manufacturer of solder paste used.

Note that this general guideline is offered as a starting point and may require adjustment for certain PCB designs and Configurations of reflow soldering equipment.

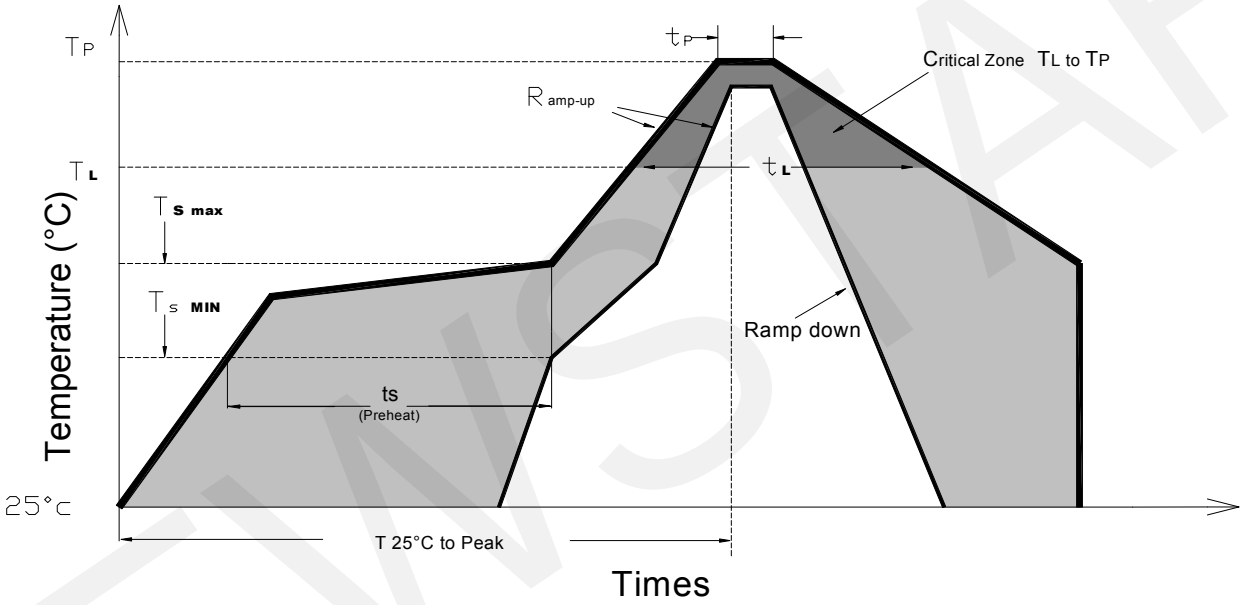

Profile Feature	Lead-Based Solder	Lead-Free Solder
Average Ramp-Up Rate (Ts_{max} to Tp)	3℃/second max.	3℃/second max.
Preheat: Temperature Min (Ts_{min})	100℃	150℃
Preheat: Temperature Min (Ts_{max})	150℃	200℃
Preheat: Time (ts_{min} to ts_{max})	60-120 seconds	60-180 seconds
Time Maintained Above: Temperature (T_L)	183 ℃	217 ℃
Time Maintained Above: Time (t_L)	60-150 seconds	60-150 seconds
Peak/Classification Temperature (T_P)	215 ℃	240 ℃
Time Within 5℃ of Actual Peak Temperature (tp)	<10 seconds	<10 seconds
Ramp-Down Rate	6℃/second max.	6℃/second max.
Time 25 ℃ to Peak Temperature	<6 minutes max.	<6 minutes max.

Note: All temperatures refer to topside of the package, measured on the package body surface.

Address : 7/F, Block A YuShan Industrial Park,Songbai Road,ShiYan Town,Bao'An | CN-518108 Shenzhen
Tel: 0755-29405686 www.newstar-ledstrip.com info@newstarleds.com

3.8 General design requirements :

. SMT nozzle requirements: (red circle refers to the nozzle diameter)

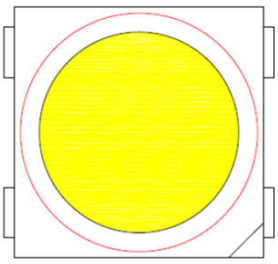

OK (nozzle diameter is greater than the light bulb area

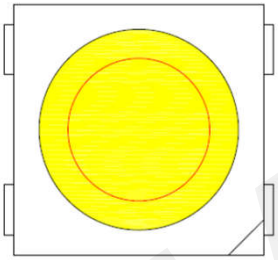

NG (nozzle diameter is less than the light beads light area)

. Material to take way: with tweezers folder material, can not press the colloid or sharp objects to touch the colloid, the material can not be stacked;

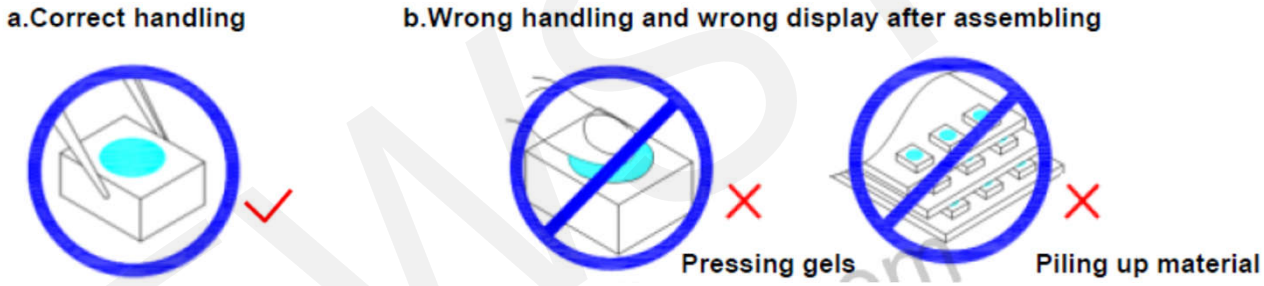

. Products in the PCB layout design, for the soft sheet, and 0.5T below the plate, the pad direction should be perpendicular to the direction of PCB extension to reduce the PCB board bending stress generated in the LED pin, resulting in LED products Due to stress acting tensile failure;

3.9 Heat Generation:

Thermal design of the end product is of paramount importance. Please consider the heat generation of the LED when making the system design. The coefficient of temperature increase per input electric power is affected by the thermal resistance of the circuit board and density of LED placement on the board, as well as components. It is necessary to avoid in tense heat generation and operate within the maximum rating given in this specification. The operating current should be decided after considering the ambient maximum temperature of LEDs

The maximum working temperature of the product is not easy to exceed 40 ˚ C (≤ 40 ˚ C, refers to the product pin at the operating temperature)

Address : 7/F, Block A YuShan Industrial Park,Songbai Road,ShiYan Town,Bao'An | CN-518108 Shenzhen
Tel: 0755-29405686 www.newstar-ledstrip.com info@newstarleds.com

4.0 Electrostatic Discharge & Surge Current :

Electrostatic discharge (ESD) or surge current (EOS) may damage LED.

Precautions such as ESD wrist strap, ESD shoe strap or antistatic gloves must be worn whenever handling of LED.

IC device signal input and output ports must be connected in series protection resistor to prevent surge or static shock port caused by product failure;

All devices, equipment and machinery must be properly grounded.

It is recommended to perform electrical test to screen out ESD failures at final inspection.

It is important to eliminate the possibility of surge current during circuitry design.

4.1 Moisture Proof Package

Cannot take any responsibility for any trouble that are caused by using the LEDs at conditions exceeding our specifications.

The LED light output is strong enough to injure human eyes. Precautions must be taken to prevent looking directly at the LEDs with unaided eyes for more than a few seconds.

The formal specification must be exchanged and signed by both parties before large volume purchase begins.

The appearance and specifications of the product may be modified for improvement without notice.

NEWSTAR